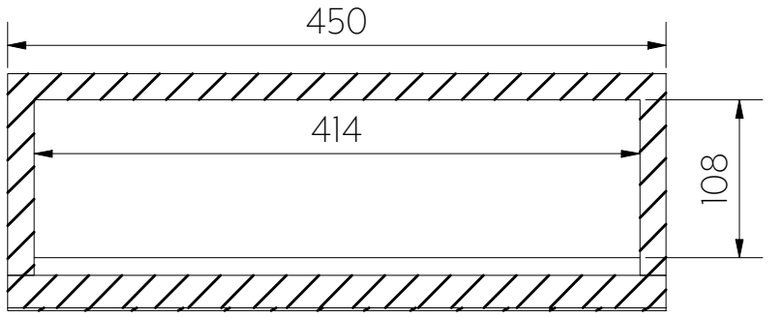

Section C-C

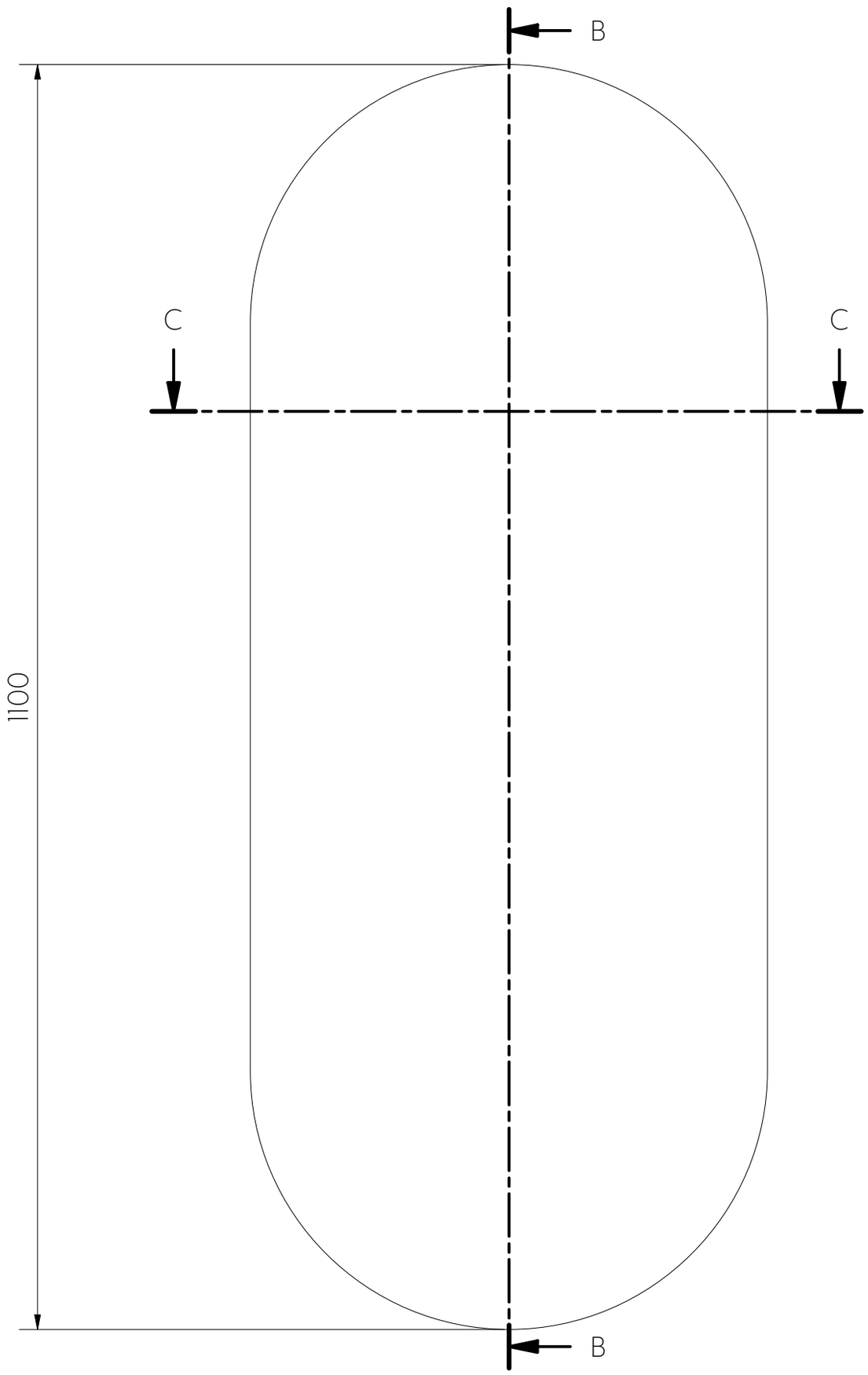

Front View

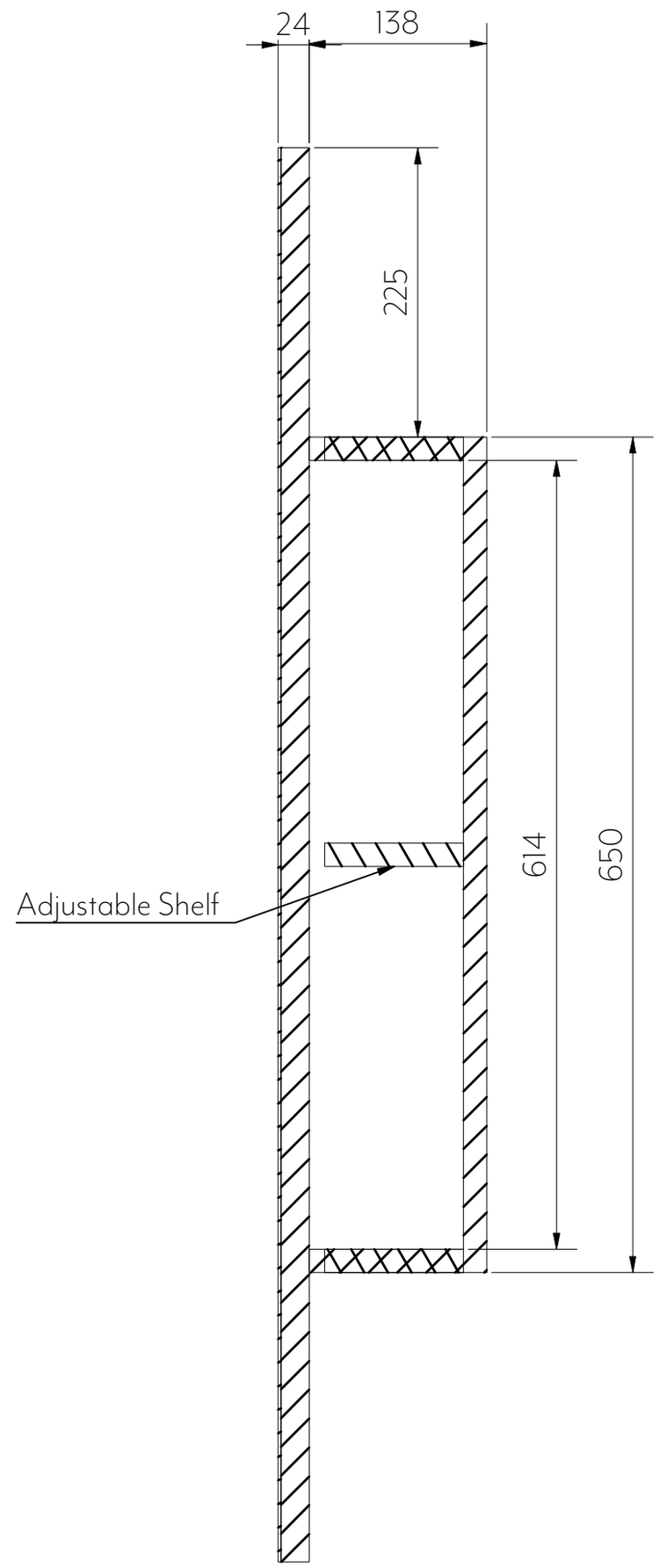

Section B-B

Note: Dimensions are nominal measurements only