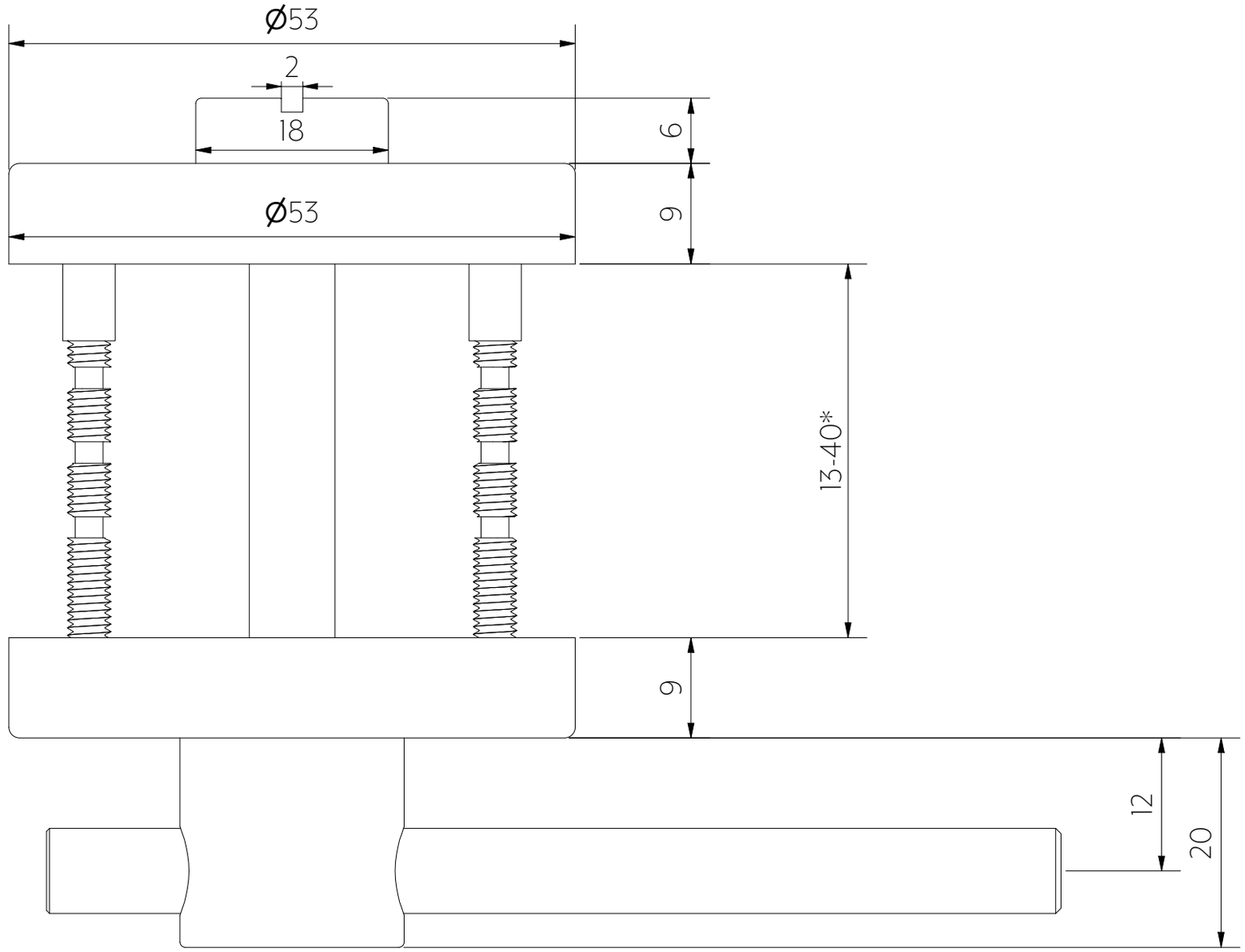

*This varies depending on install (latch 35-40 or catch 13-40)

Top view - indicator

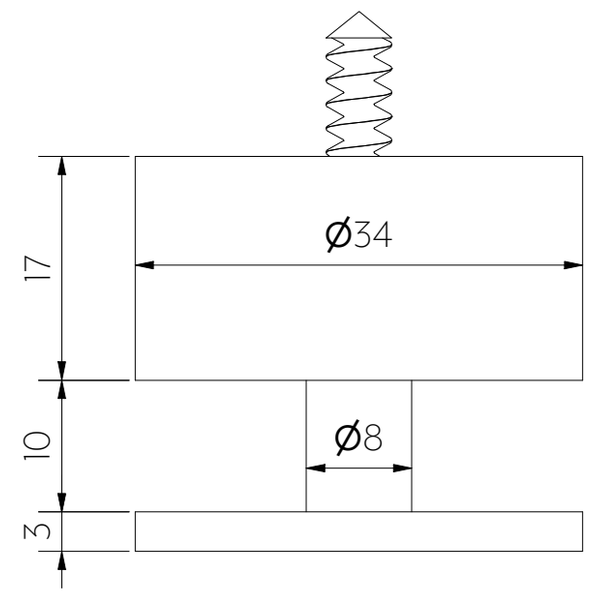

Top view - catch

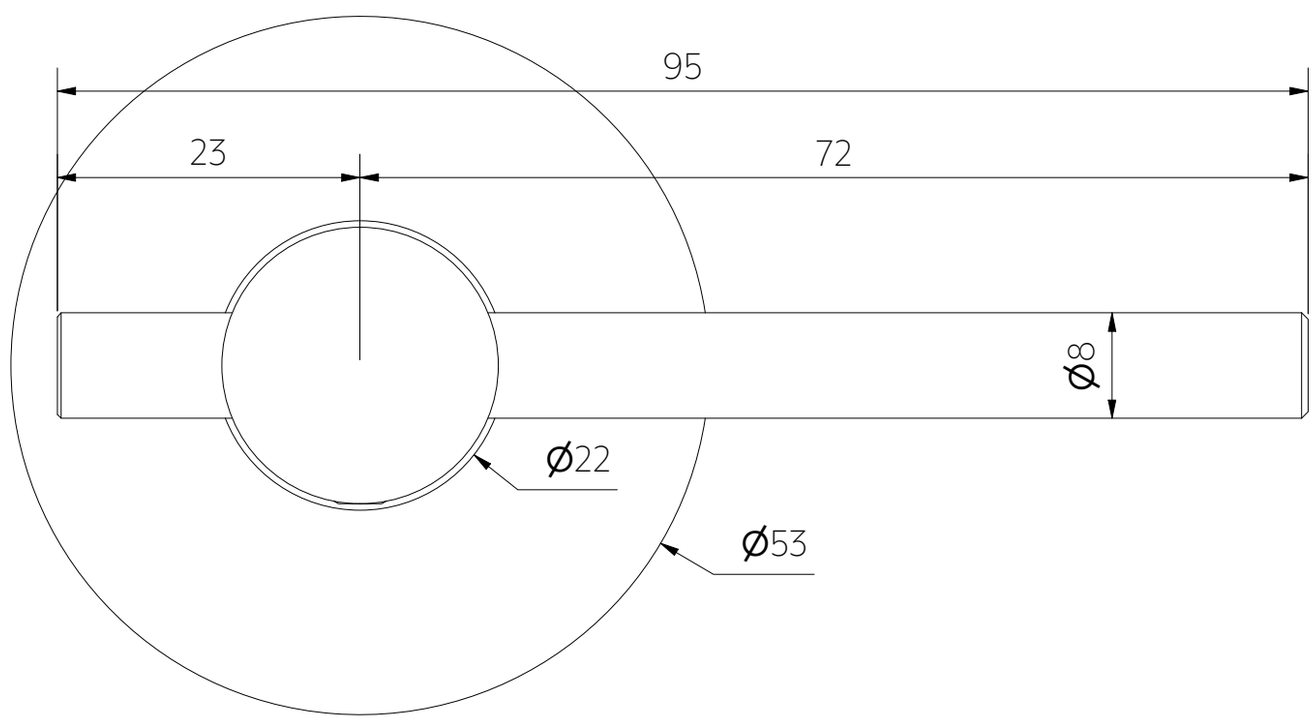

Front view - indicator

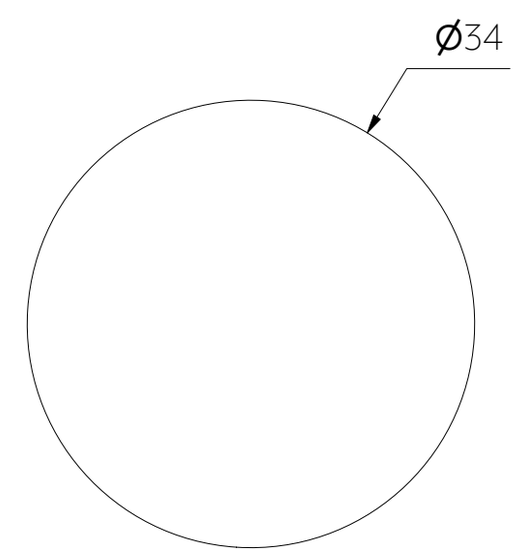

Front view - catch

Note: Dimensions are nominal measurements only