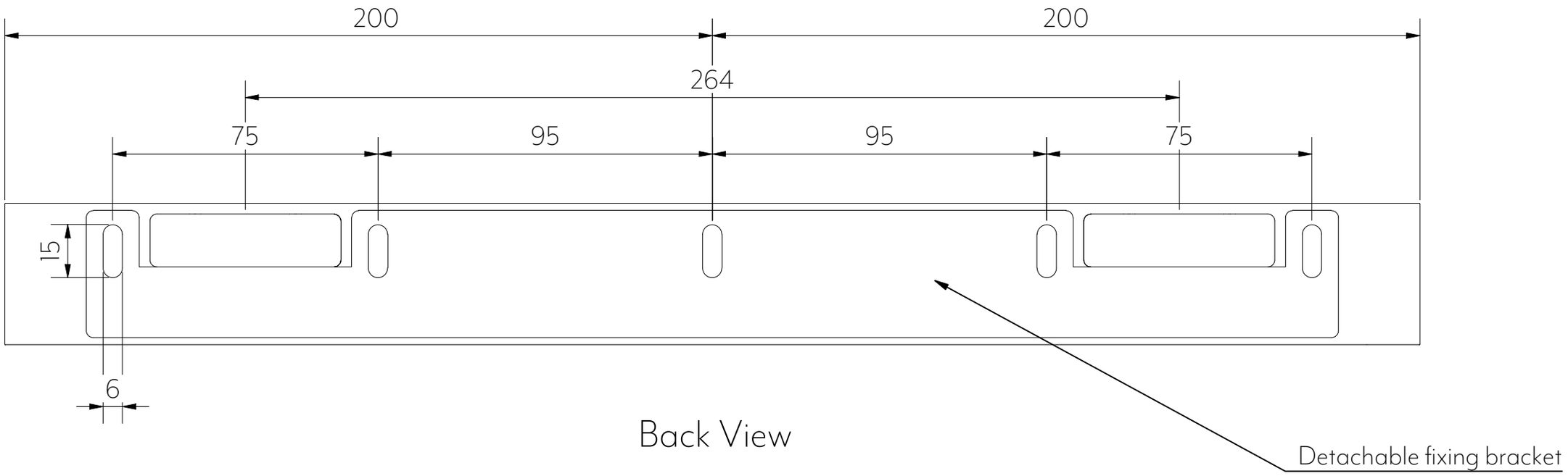

Back View

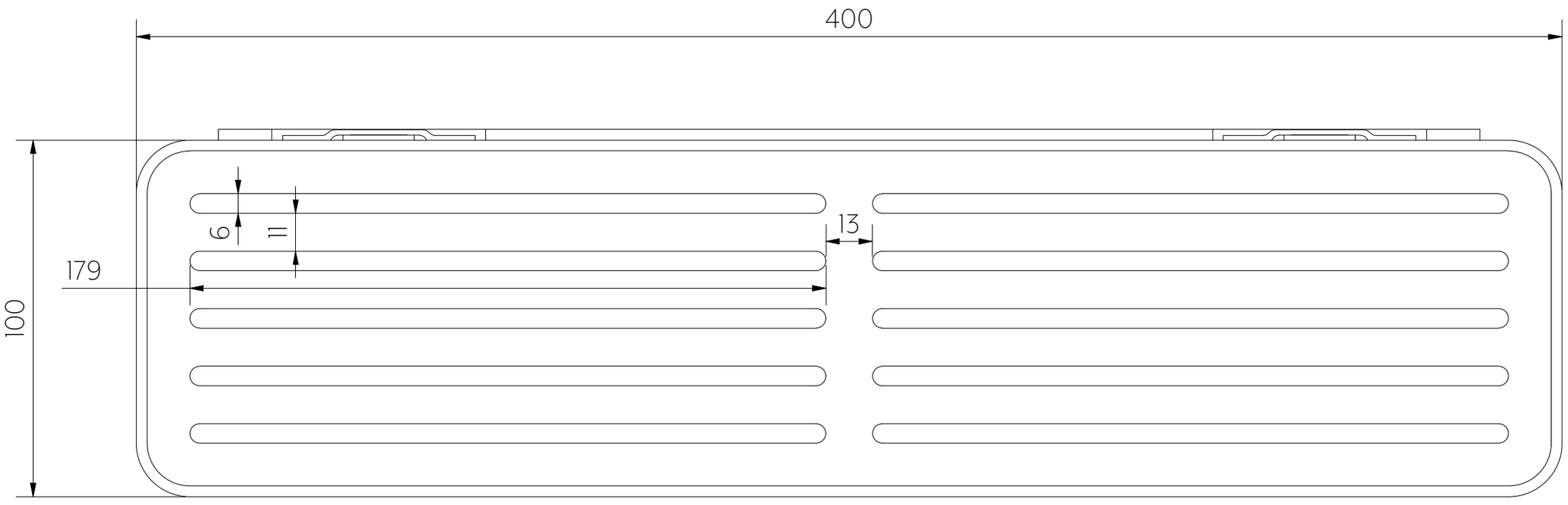

Top View



Front View

Note: Dimensions are nominal measurements only